artexport
artexport.it

Bookcase 2513-48"

ISTRUZIONI DI MONTAGGIO – NOTICE DE MONTAGE – ASSEMBLY INSTRUCTIONS

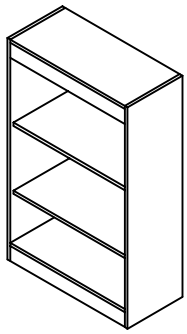

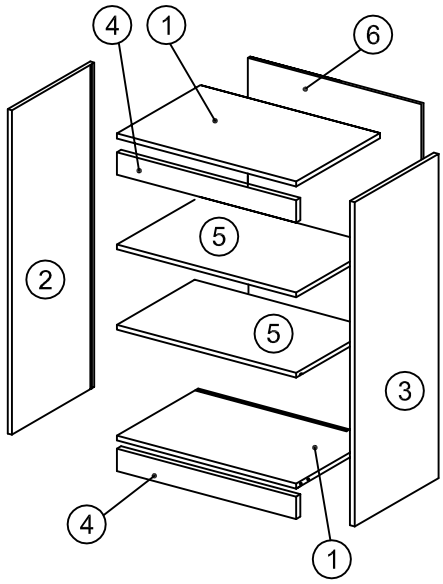

UTENSILI NECESSARI – OUTILS NECESSAIRES
TOOLS NEEDED

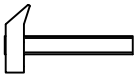

AE	KE	PB	WA	WE					
16	8	4	8	1					

1

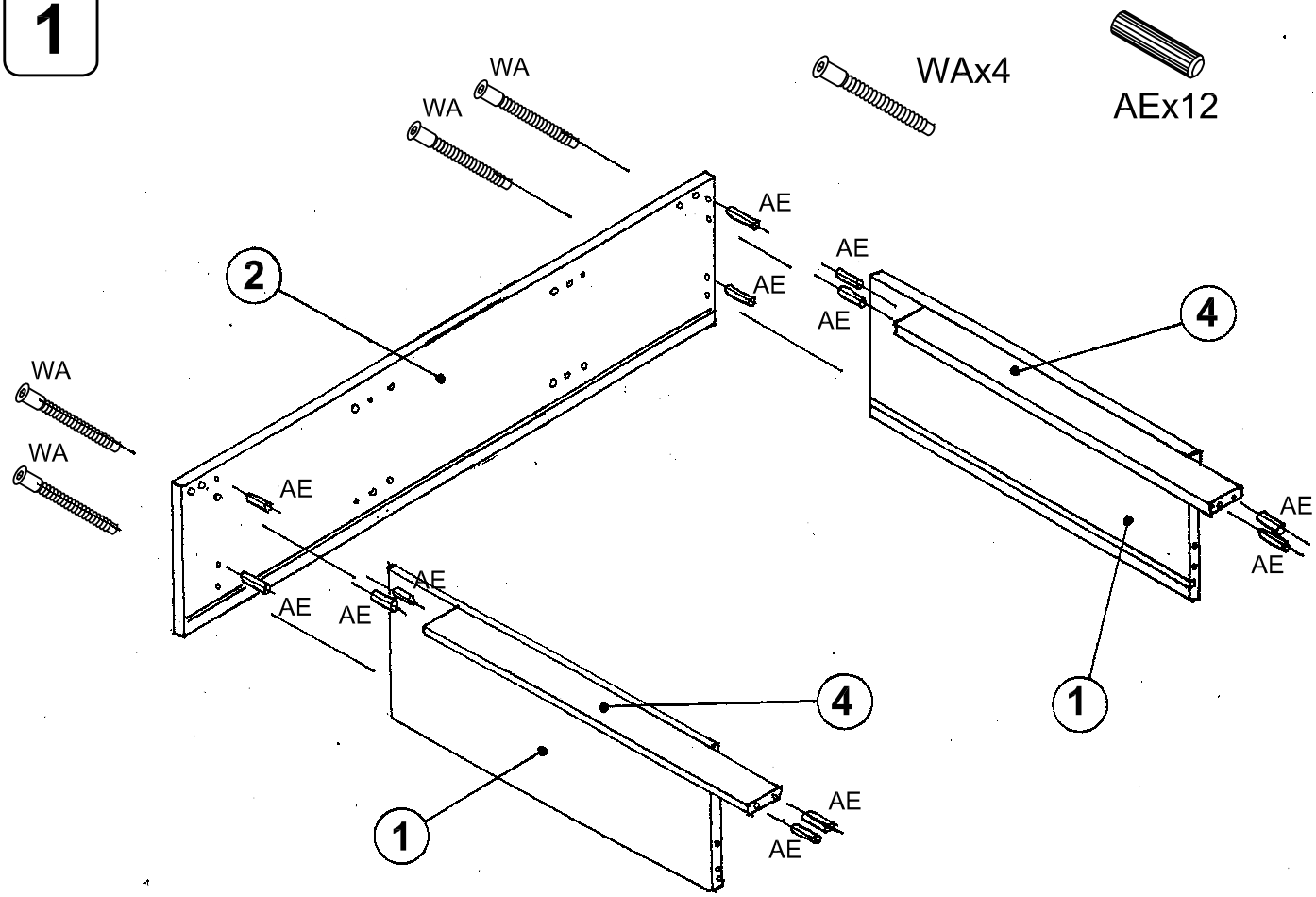

2

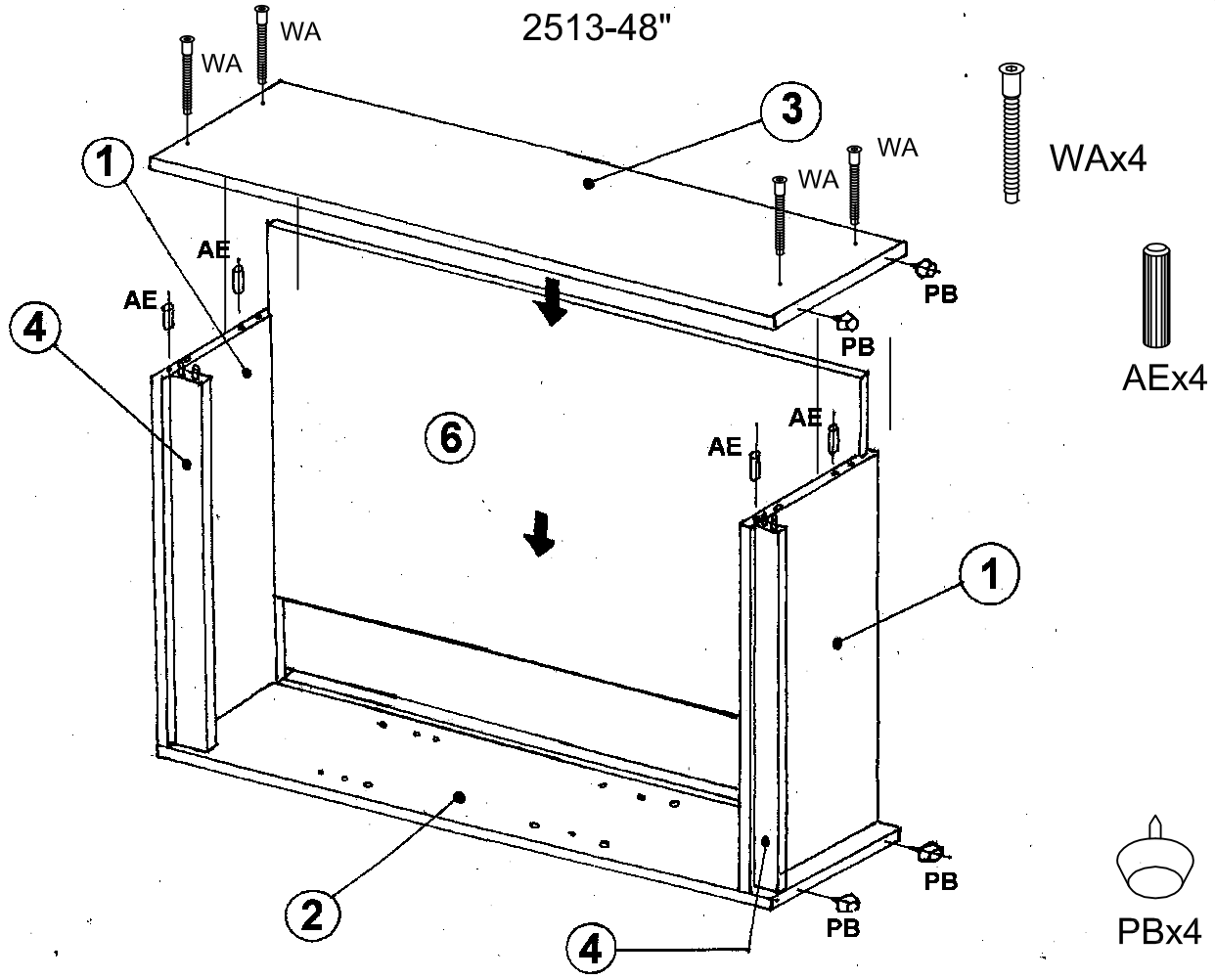
2513-48"
WA
WA
WA
WA
WAx4
1
3
AE
AE
4
PB
PB
AEx4
6
AE
AE
1
2
4
PB
PB
PBx4

3

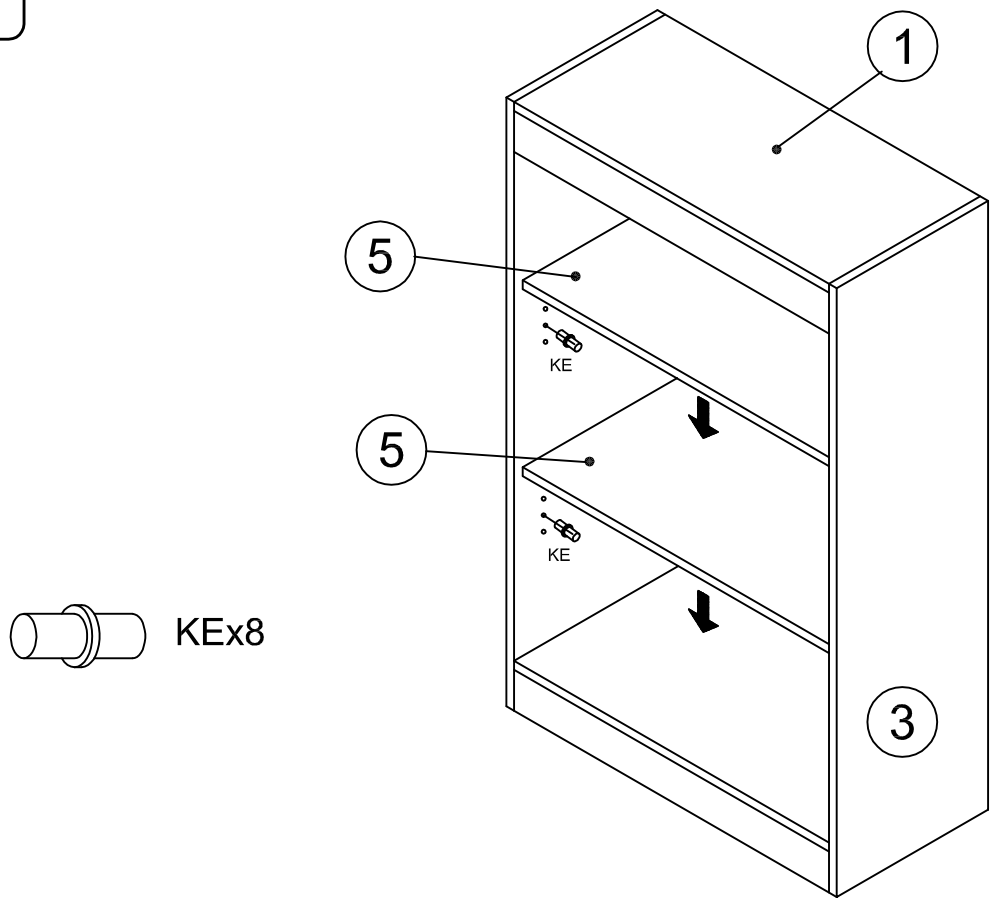
1
5
KE
5
KE
KEx8
3